VILMA



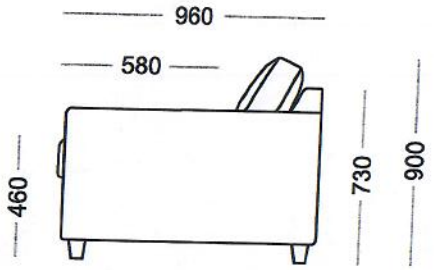

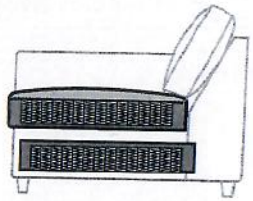

Seat cushions:
Regular foam (30kg/m³)
Pocket springs / fiber padding

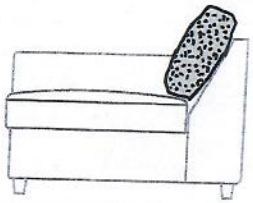

Back cushions:
Fiber balls / spaghetti foam

3s

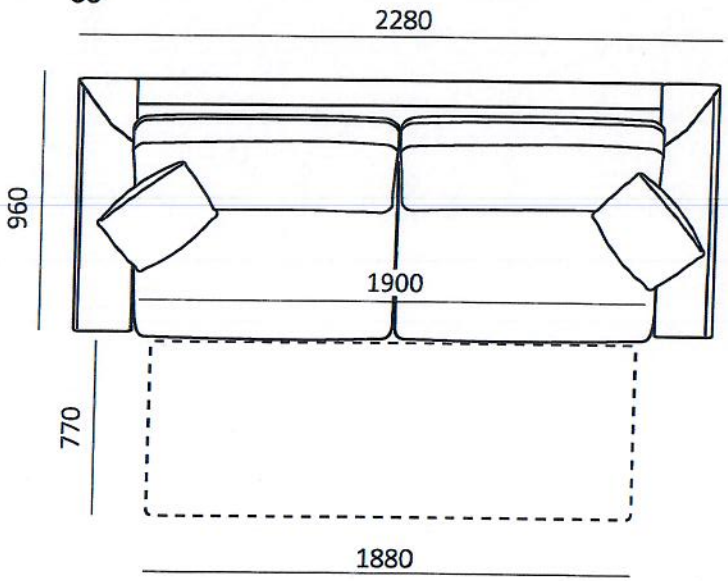

Legs: Nr.40 Wooden

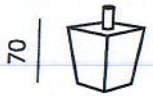



Wenge Oiled

Softlines FURNITURE