FIRENZE SOFA

HOUSE NORDIC

ASSEMBLY INSTRUCTION

1301500/1301501/1301502/1301503/1301504/1301505/
1301506/1301510/1301511/1301512/1301513

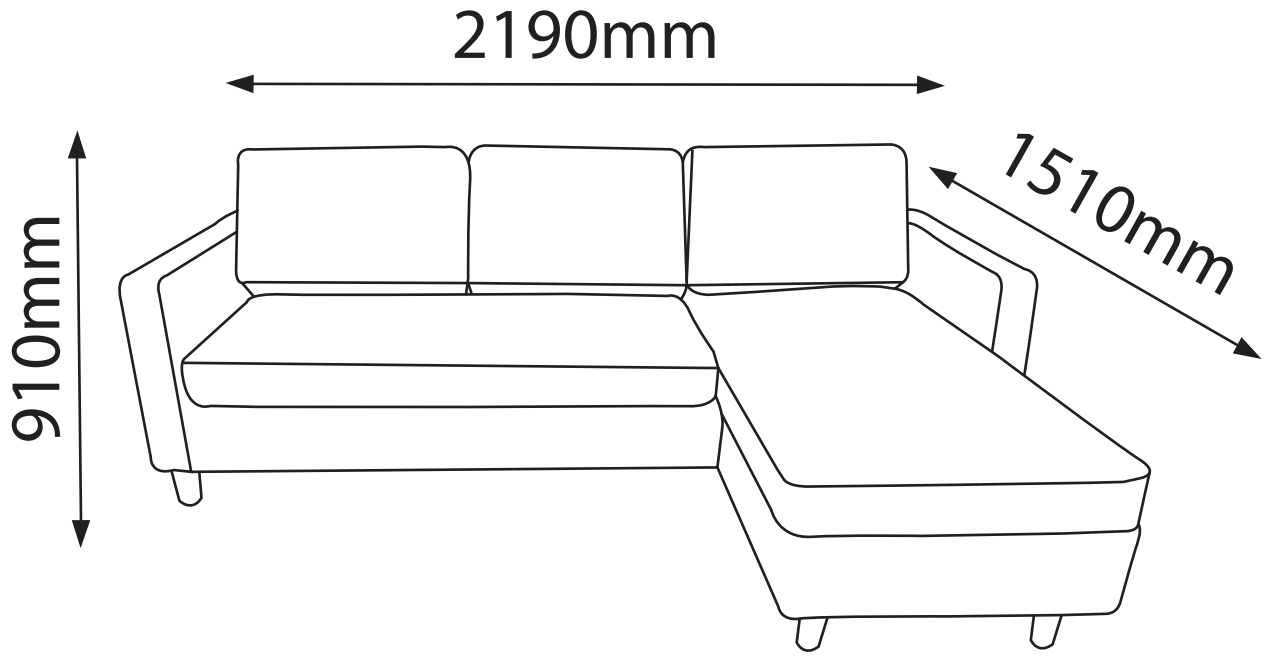

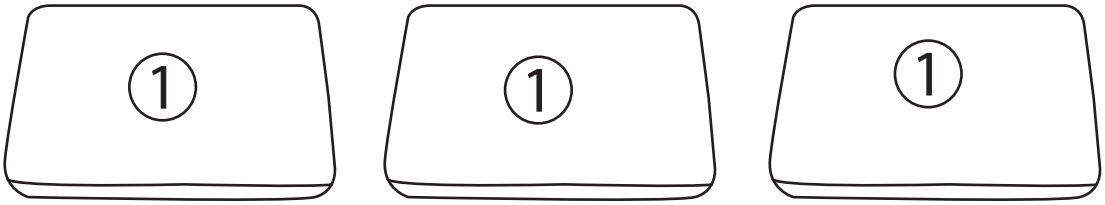
1
1
1

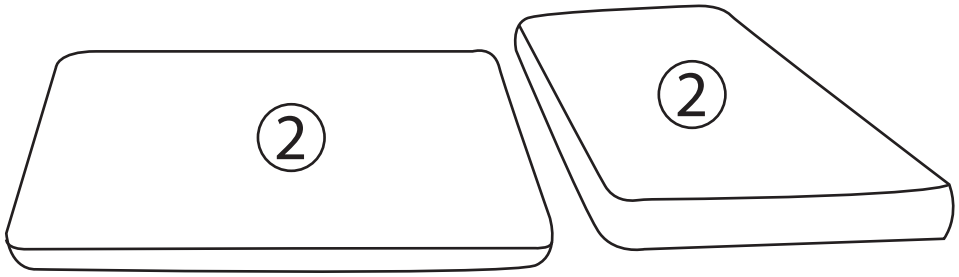
2
2

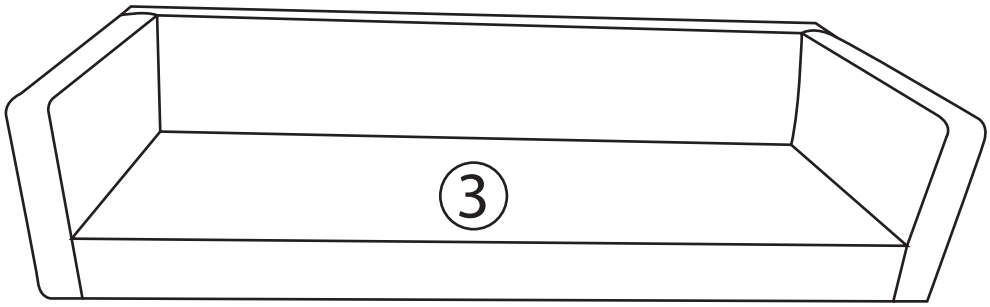
3


5
6


5


5


5

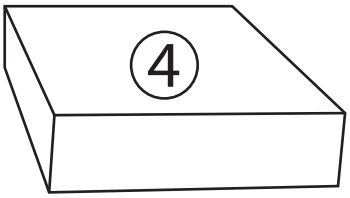
4


5


5


5


5

① Cushion and legs inside the bottom of the sofa

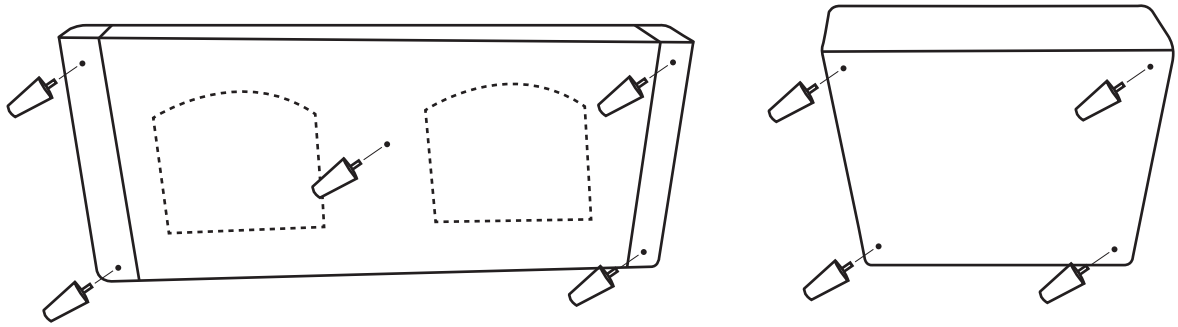

② 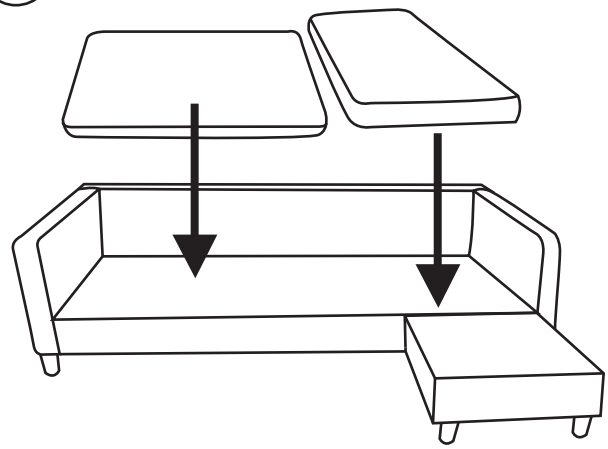

③ 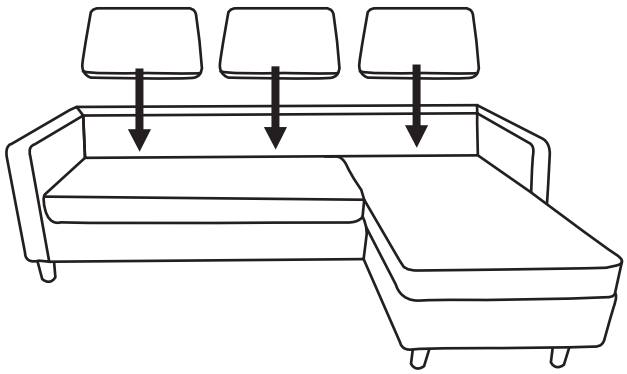

④ 